Moulding Dimensions & Wrap Lines.

Bullnose Cornice

All Moulding Product Codes Starting **SBC**

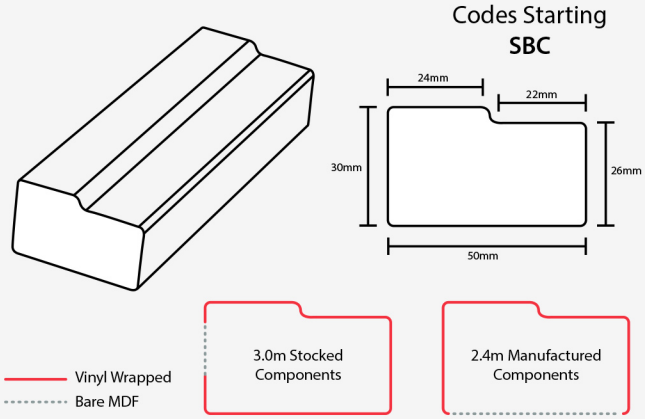

Pelmet

All Moulding Product Codes Starting **L**

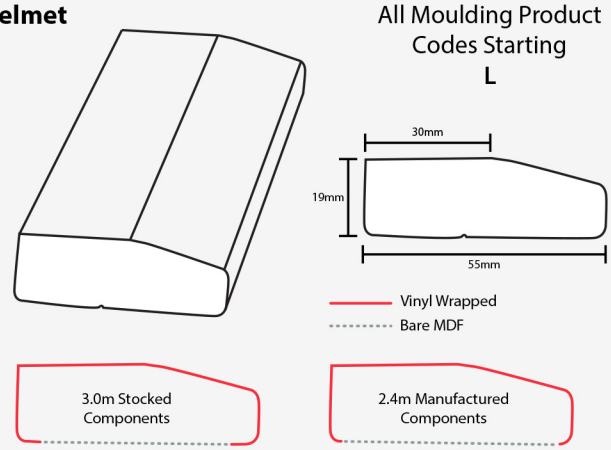

Cornice

All Moulding Product Codes Starting **C**

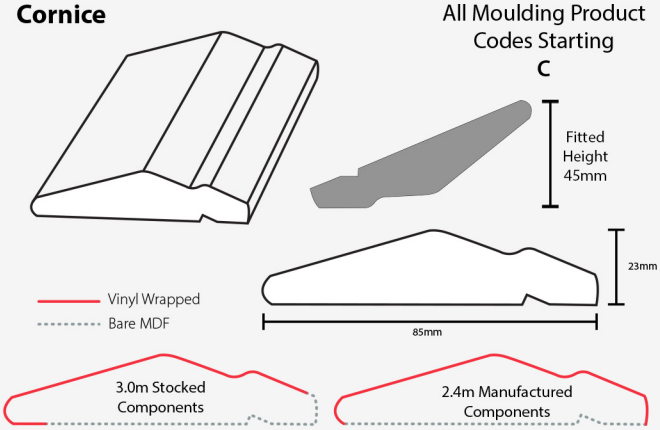

Square Edged Moulding

All Moulding Product Codes Starting **CSQ**

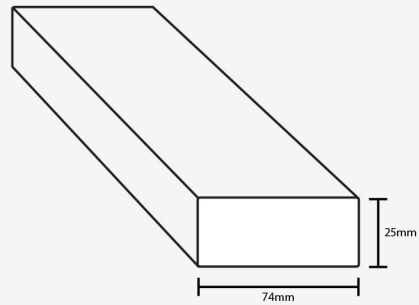

Round Bullnose Cornice

All Moulding Product Codes Starting **RBC**

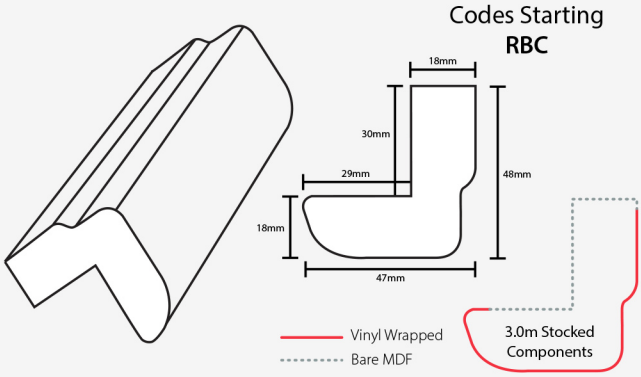

Namuri / Linear Multi Purpose Rails

All Moulding Product Codes Starting **MPRST / MPRNAM**

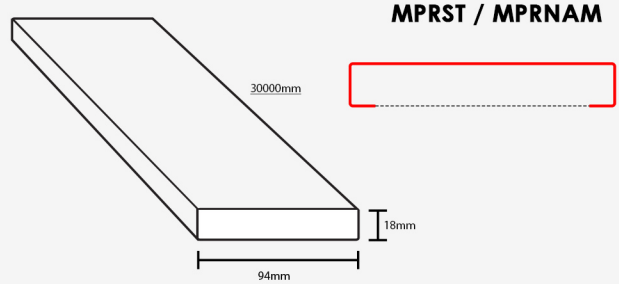

Dual Purpose Cornice

All Moulding Product Codes Starting **DP**

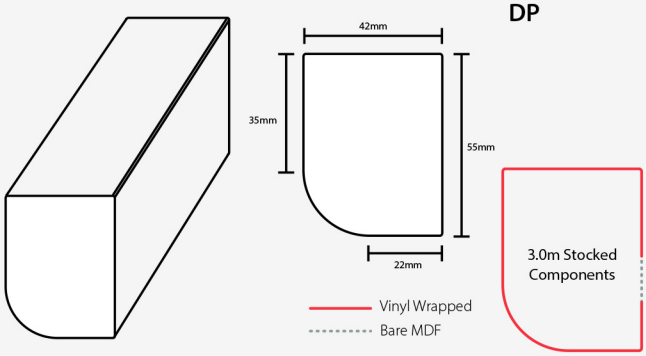

Rounded Pilaster
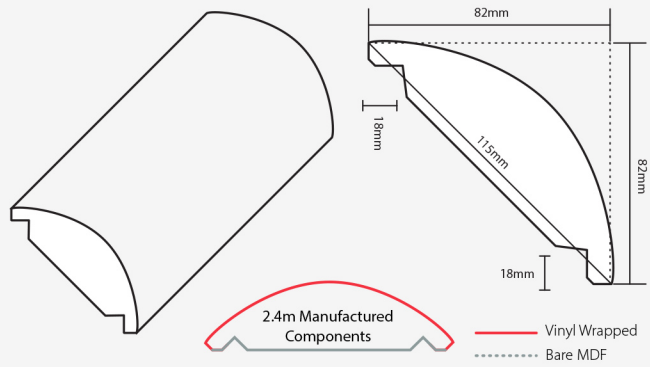
Available in 2.4m Vinyl Wrapped Only